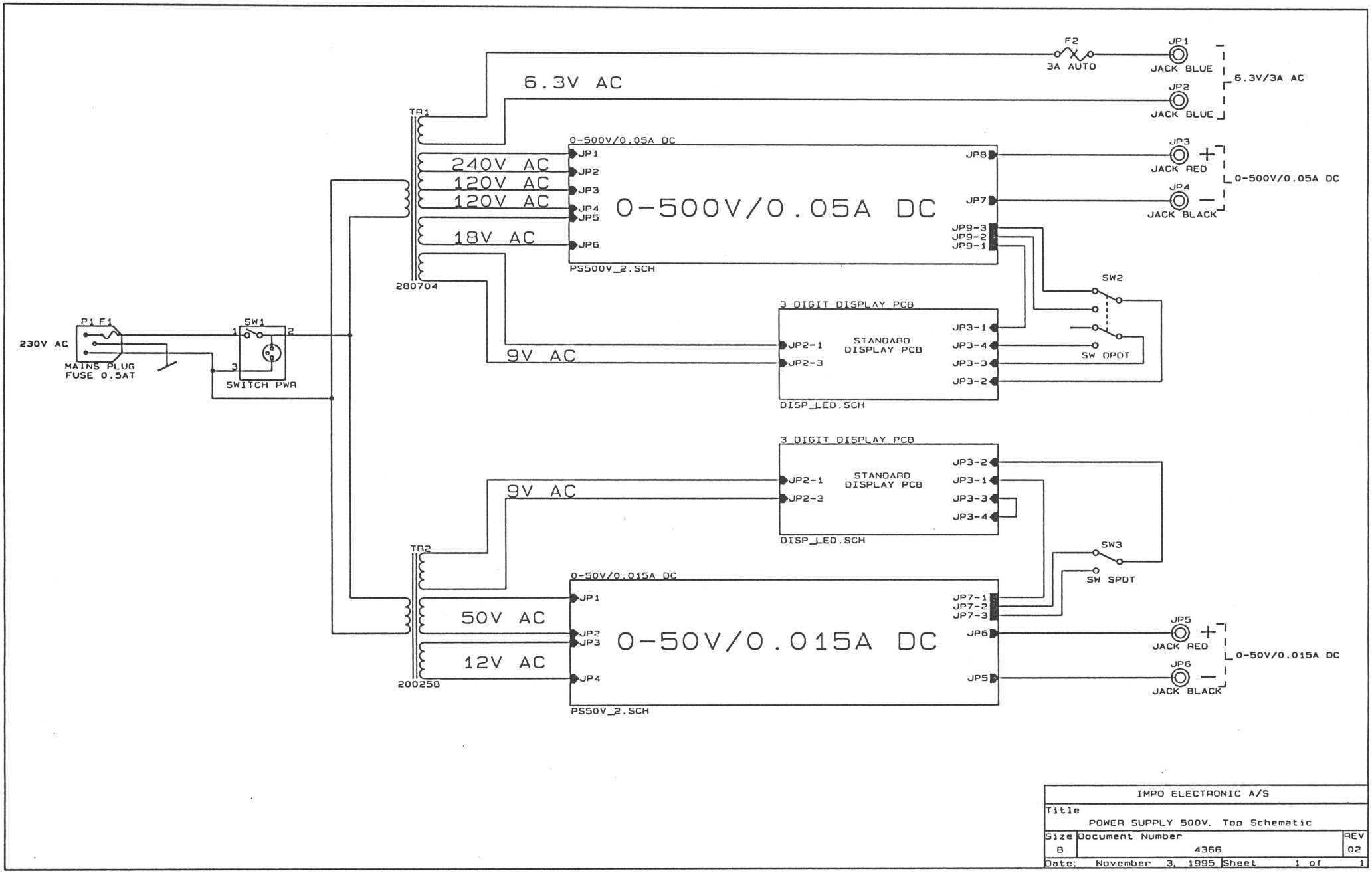

IMPO ELECTRONIC A/S		
Title POWER SUPPLY 500V, Top Schematic		
Size B	Document Number 4366	REV 02
Date: November 3, 1995	Sheet 1 of 1	

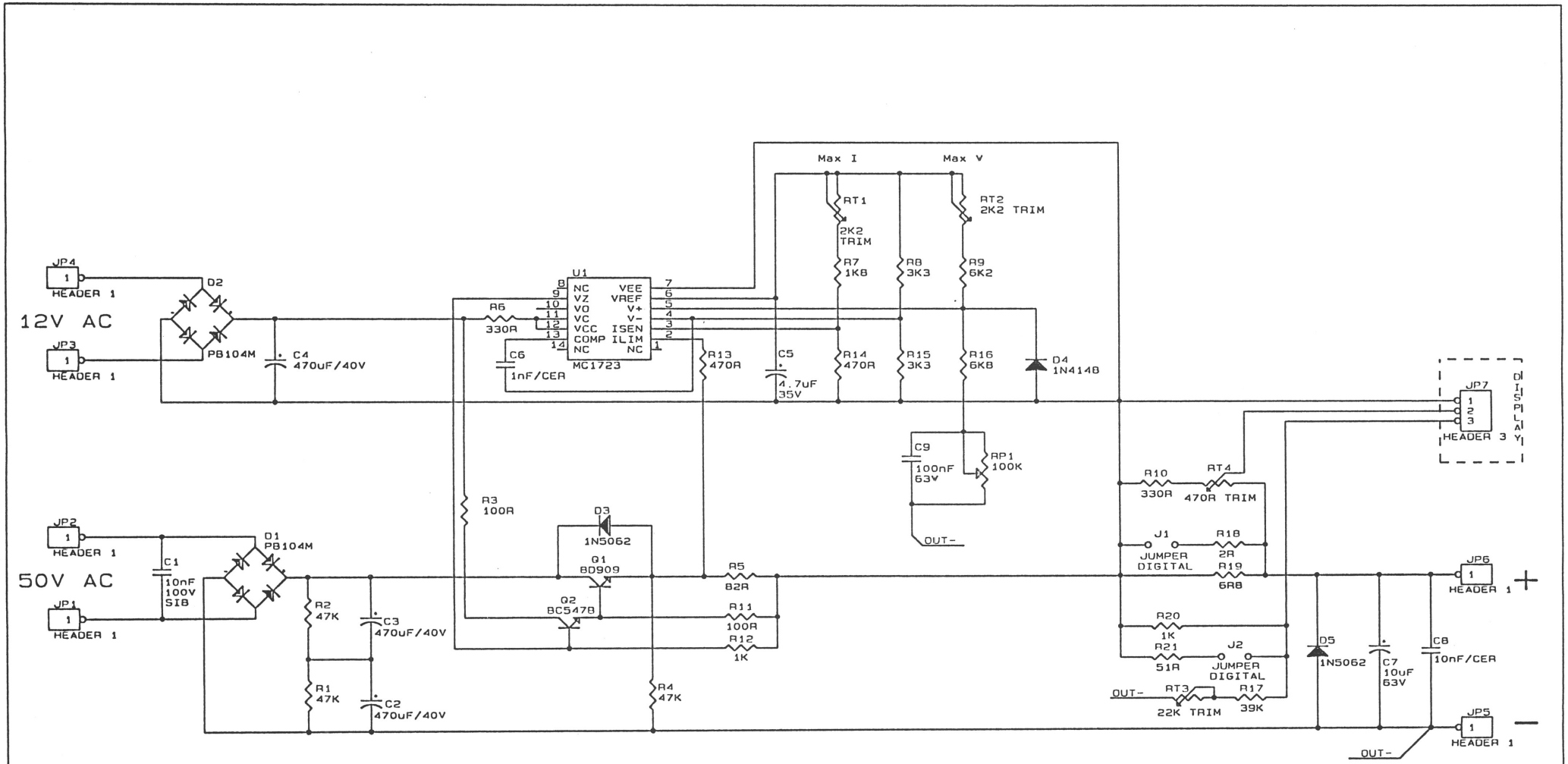

IMPO ELECTRONIC A/S		
Title POWER SUPPLY 500V, 0-50V/0.015A DC		
Size B	Document Number 4368	REV 02
Date: January 15, 1996	Sheet 1 of 1	

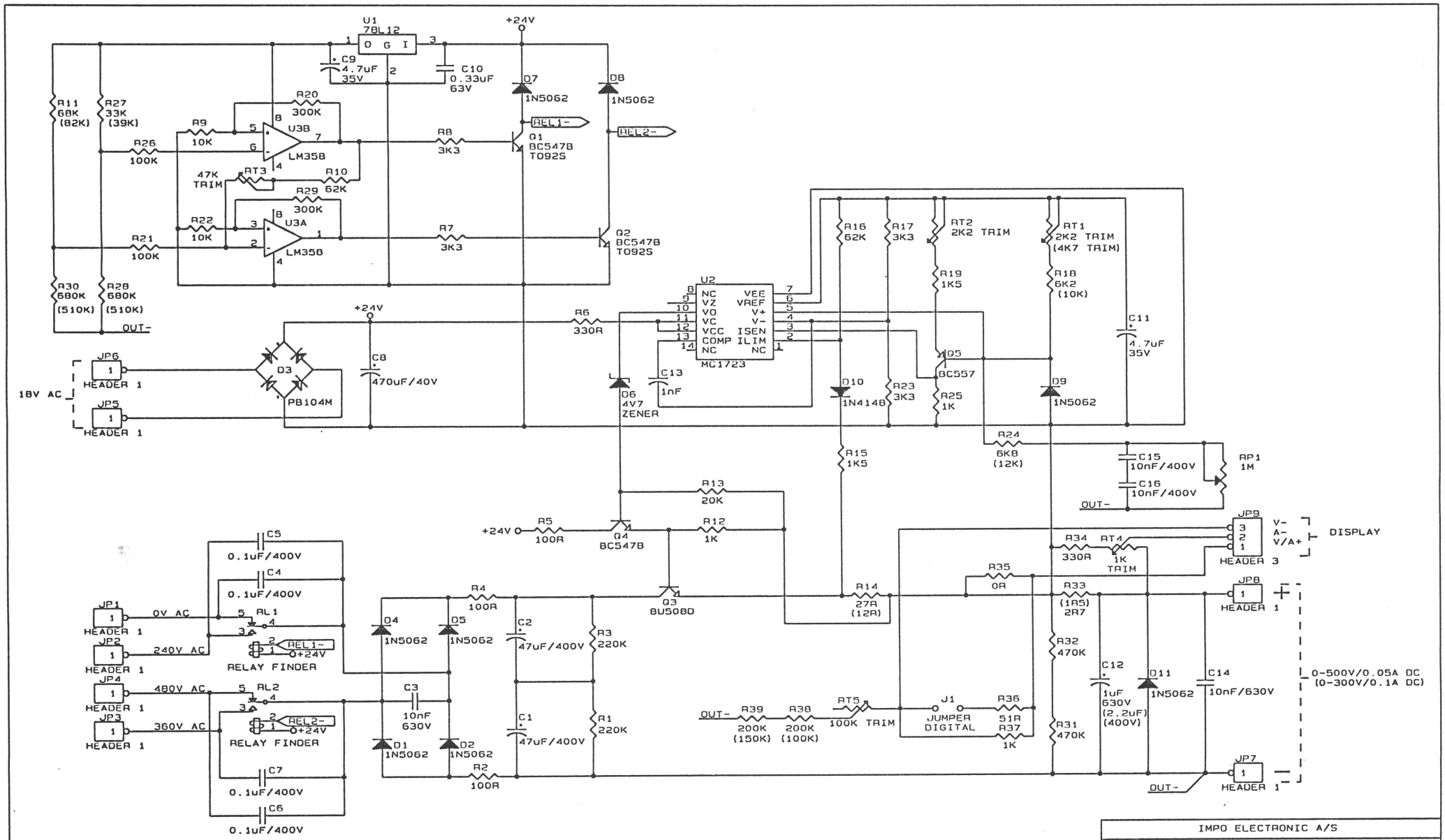

( ) REFERENCE TO POWER SUPPLY 300V

IMPO ELECTRONIC A/S		
Title	PS300-500V PCB	
Size B	Document Number 4367	REV 02
Date: January 15, 1996	Sheet 1 of 1	